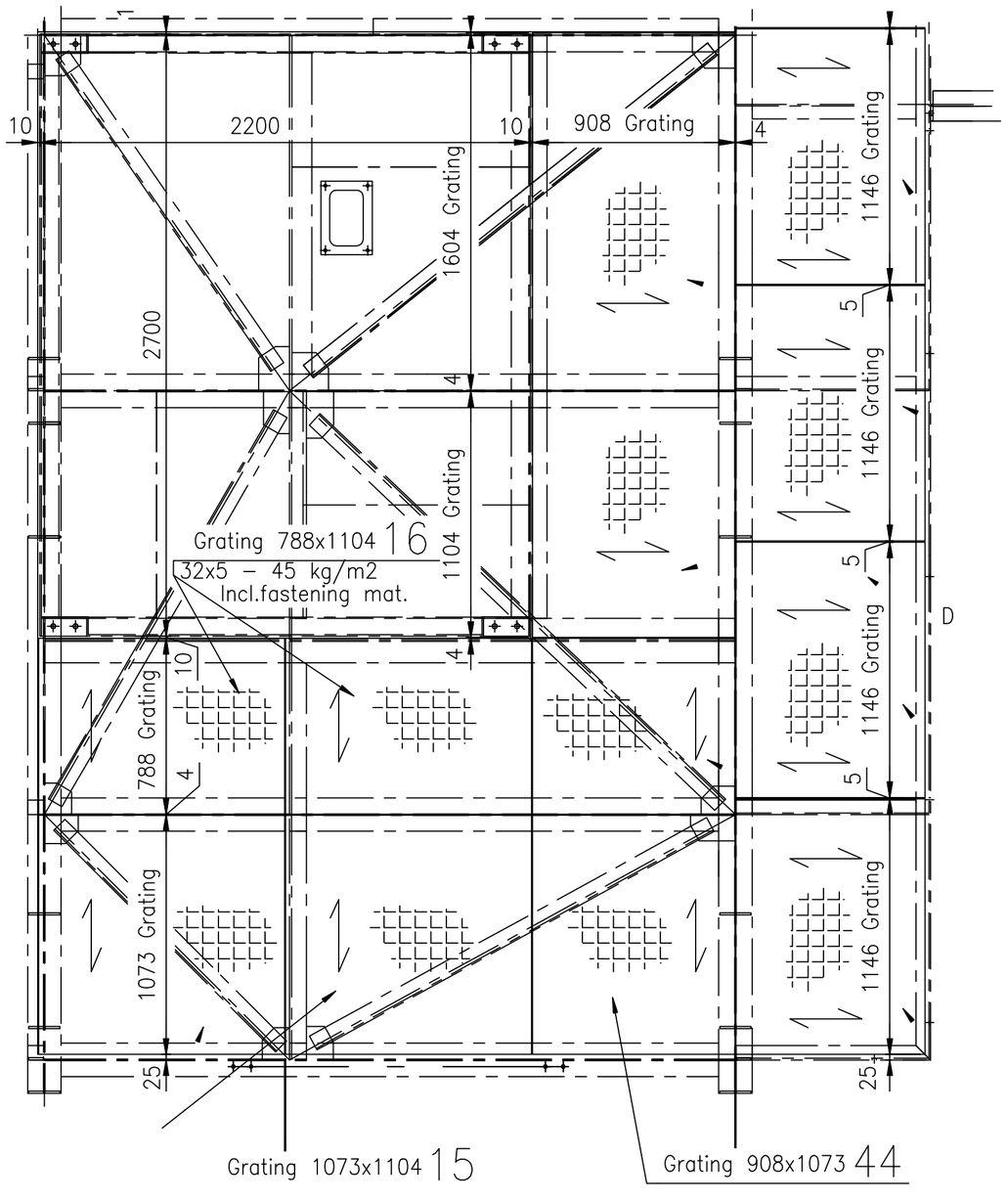
10
2200
10
908 Grating
4
1146 Grating
1604 Grating
2700
5
4
1146 Grating
1104 Grating
Grating 788x1104 16
32x5 – 45 kg/m2
Incl.fastening mat.
5
D
10
4
788 Grating
4
1146 Grating
5
1073 Grating
1146 Grating
25
25
Grating 1073x1104 15
Grating 908x1073 44

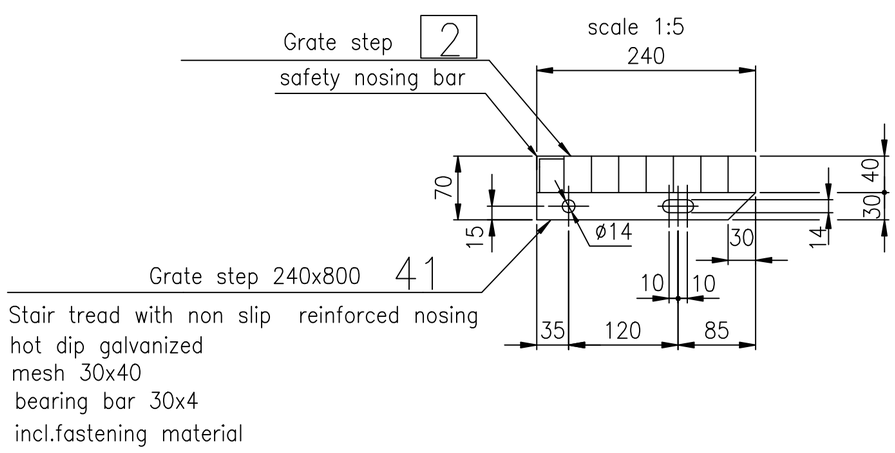
Grate step 2
safety nosing bar
scale 1:5
240
70
15
ø14
30
14
40
30
Grate step 240x800 41
10
10
35
120
85
Stair tread with non slip reinforced nosing
hot dip galvanized
mesh 30x40
bearing bar 30x4
incl.fastening material